TESSERA 4X
OFF ROAD ACCESSORIES

Think Quality!

Tessera Tower+
Tessera Tower+ Side Panels
Tessera Tower+ Extra Bar

Owner's Manual

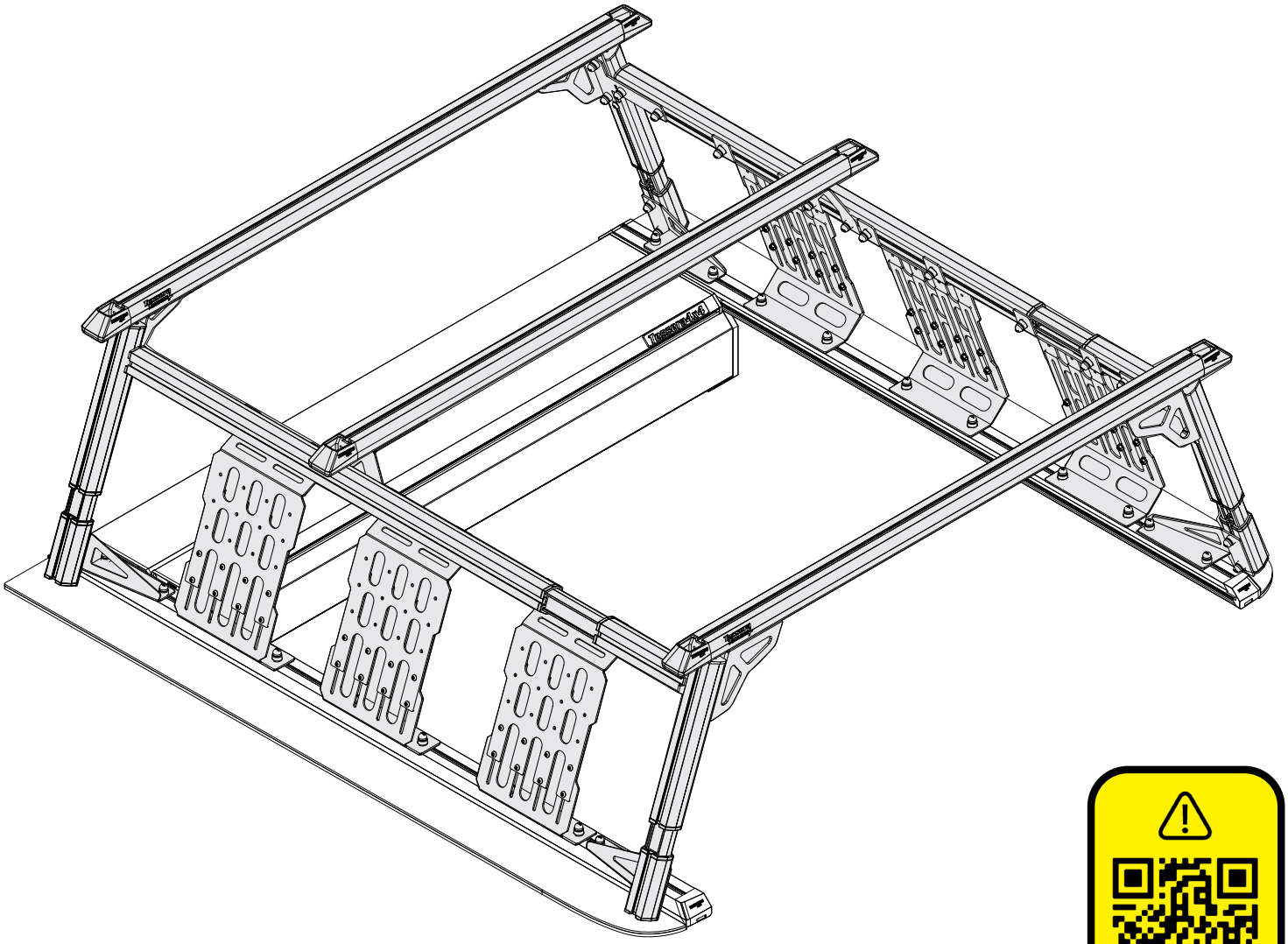

Activate your WARRANTY

Installation Date:	/ /

CAUTION: !!! Keep it in safe place (glove box)

Ver.: 1.6

SERIAL NUMBER: Tessera Tower+

SERIAL NUMBER
Tessera Tower+

Dear Customer,

Thank you for choosing **Tessera Tower+!**

We're excited to welcome you to the **Tessera4x4 accessories** family and thank you for trusting us with your 4x4 setup. The **Tessera Tower+** is more than just a rack system — it's a **telescopic, adjustable, and modular solution** designed to handle your toughest adventures with style and functionality.

Get Started with Your **Tessera Tower+**

If you haven't started using it yet, here are a few important things to know:

- **Telescopic and Adjustable –** Modify both height and length to match your load and needs.
- **Modular System** – Customize your setup with optional side Molle panels and an extra crossbar, available as extras for even more mounting and storage possibilities.
- **Global First in Modularity** – **The Tessera Tower+** is the first telescopic rack system globally designed to support optional side panels and an extra bar, offering unmatched versatility and design.
- **Heavy-Duty Engineering** – Crafted from high-quality materials for superior strength and endurance.
- **Universal Application** – Designed to fit a wide range of European and US pickup truck models with ease.

Need Help?
We want you to enjoy every moment with your **Tessera Tower+**. If you have any questions or need support, reach us at **info@gianso.gr**. Our team is always here to help!

Stay Connected!

We'd love to see how you're using your **Tessera Tower+**. Don't forget to tag us and share your setup

Website: https://www.tessera4x4.com

Instagram: https://www.instagram.com/Tessera4x4_Accessories/

Facebook: https://www.facebook.com/Tessera4x4.Accessories.Tessera4x4Rolls

TikTok: https://www.tiktok.com/@tessera4x4

Thank you again for your purchase. We hope your **Tessera Tower+** transforms every journey into a premium experience.

Best regards,
Tessera4x4 Accessories Team

1. 1

Operation ➡ **Tower+ Height Adjustment**

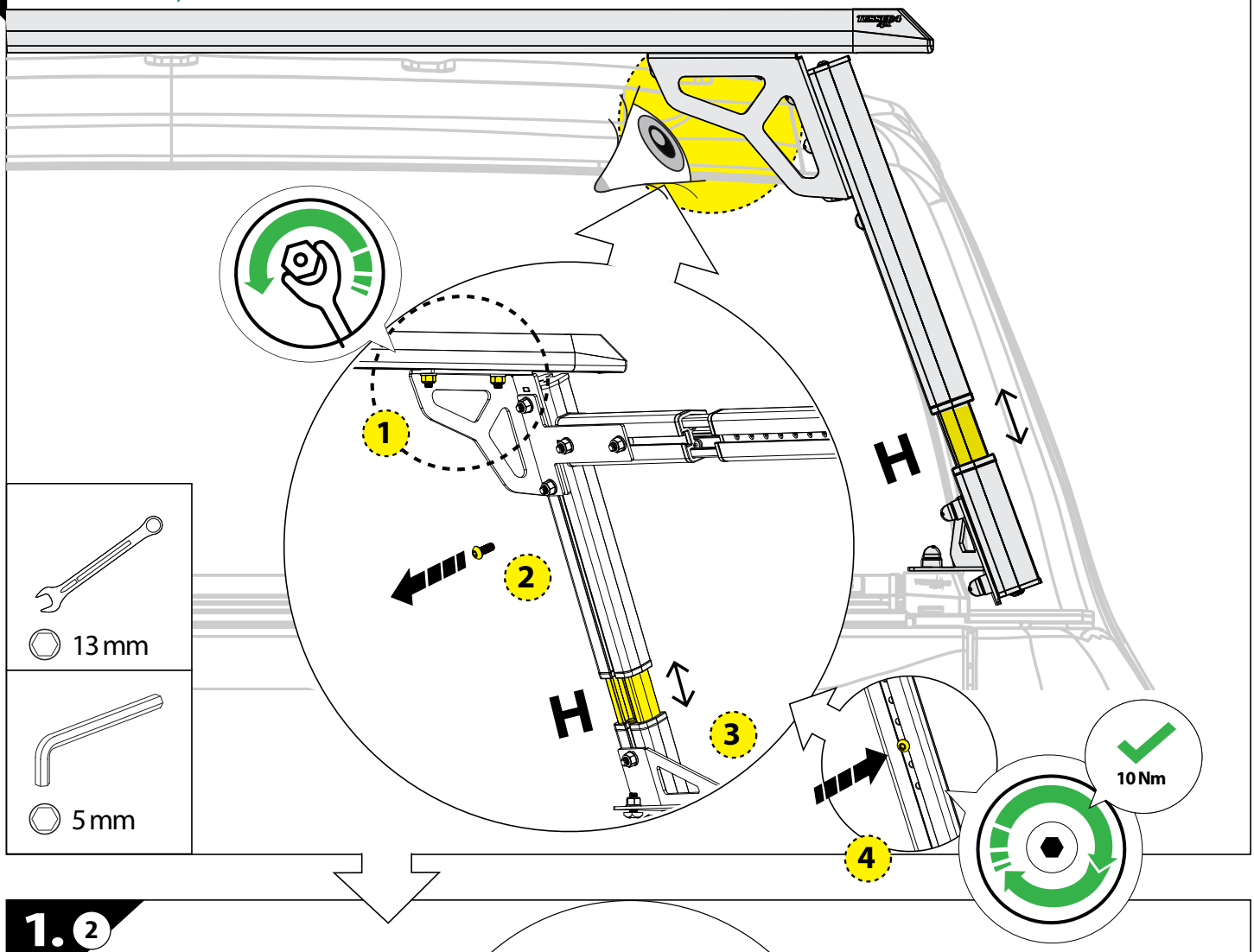

1. 2

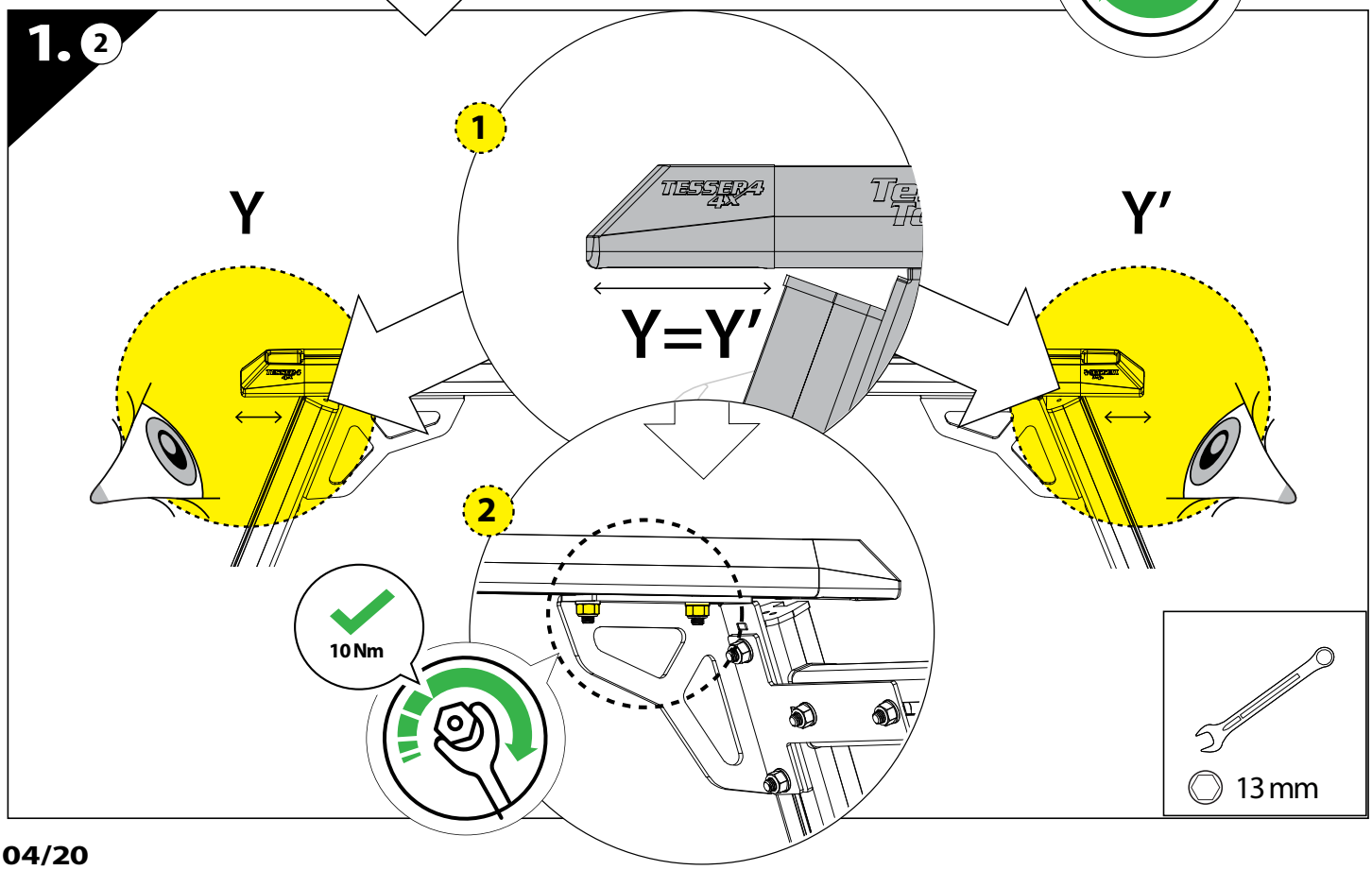

2.1

Operation ➡ **Tower+ Length Adjustment**

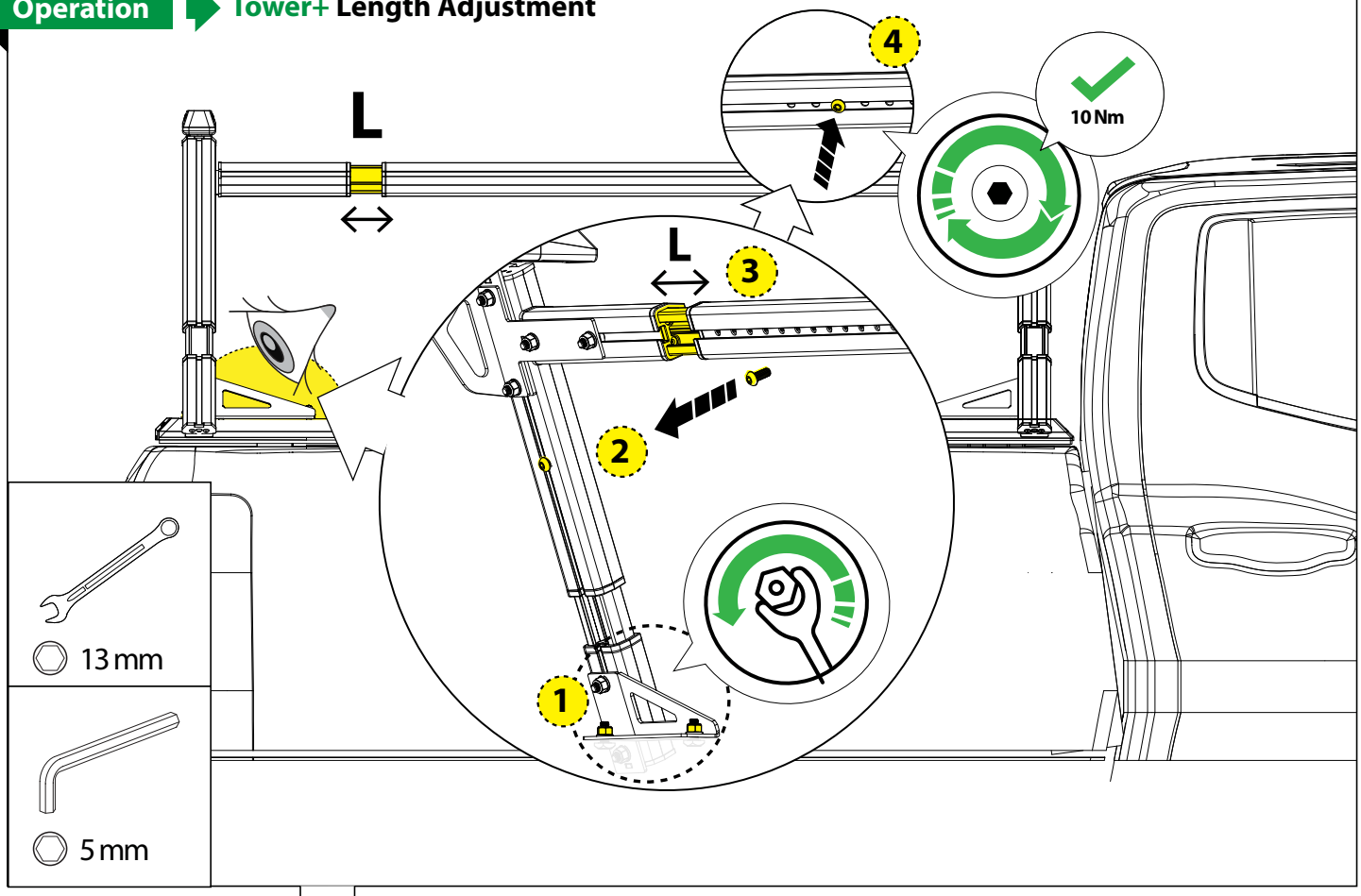

2.2

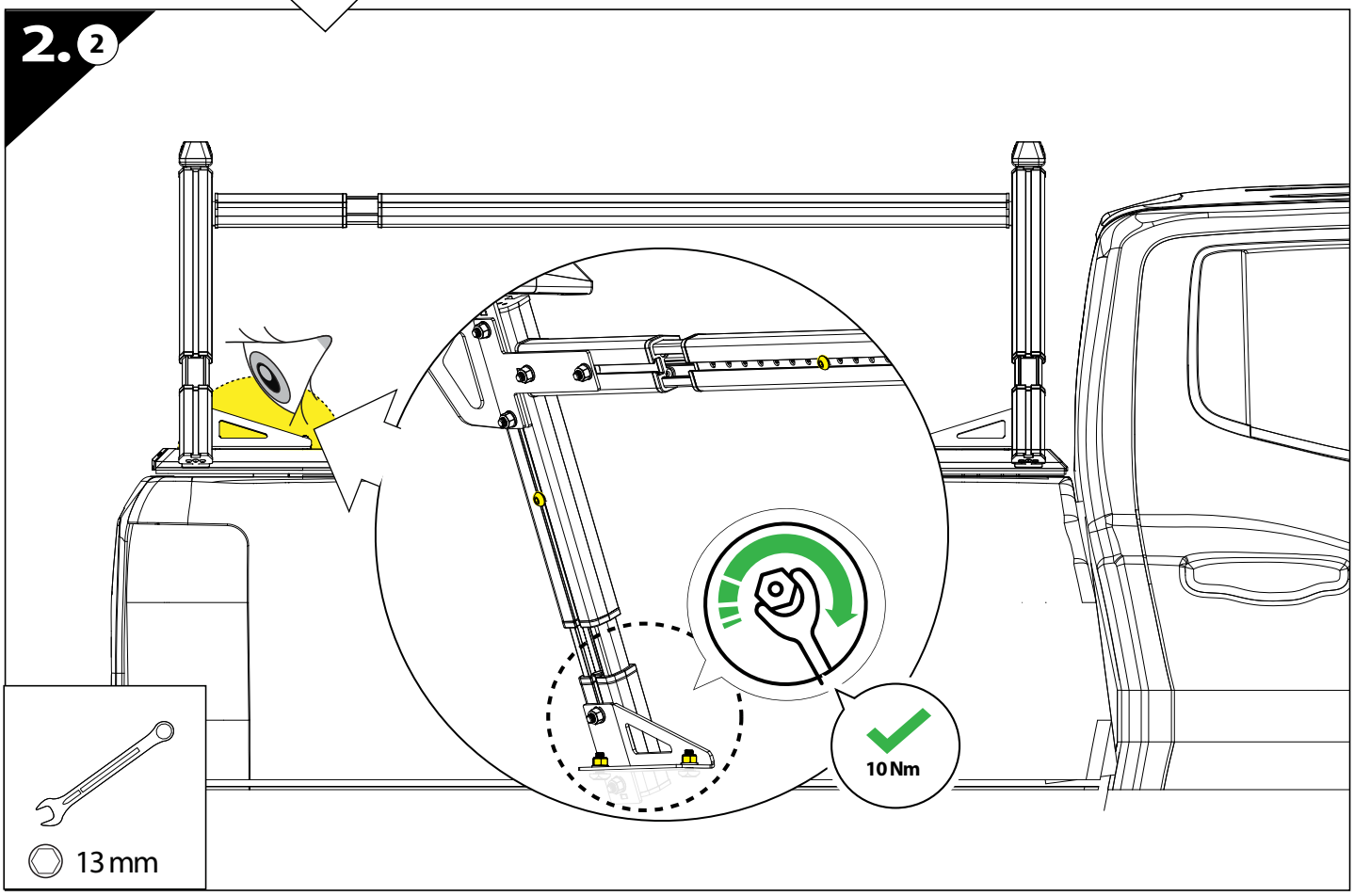

3

Operation → Extra Bar+ Length Adjustment

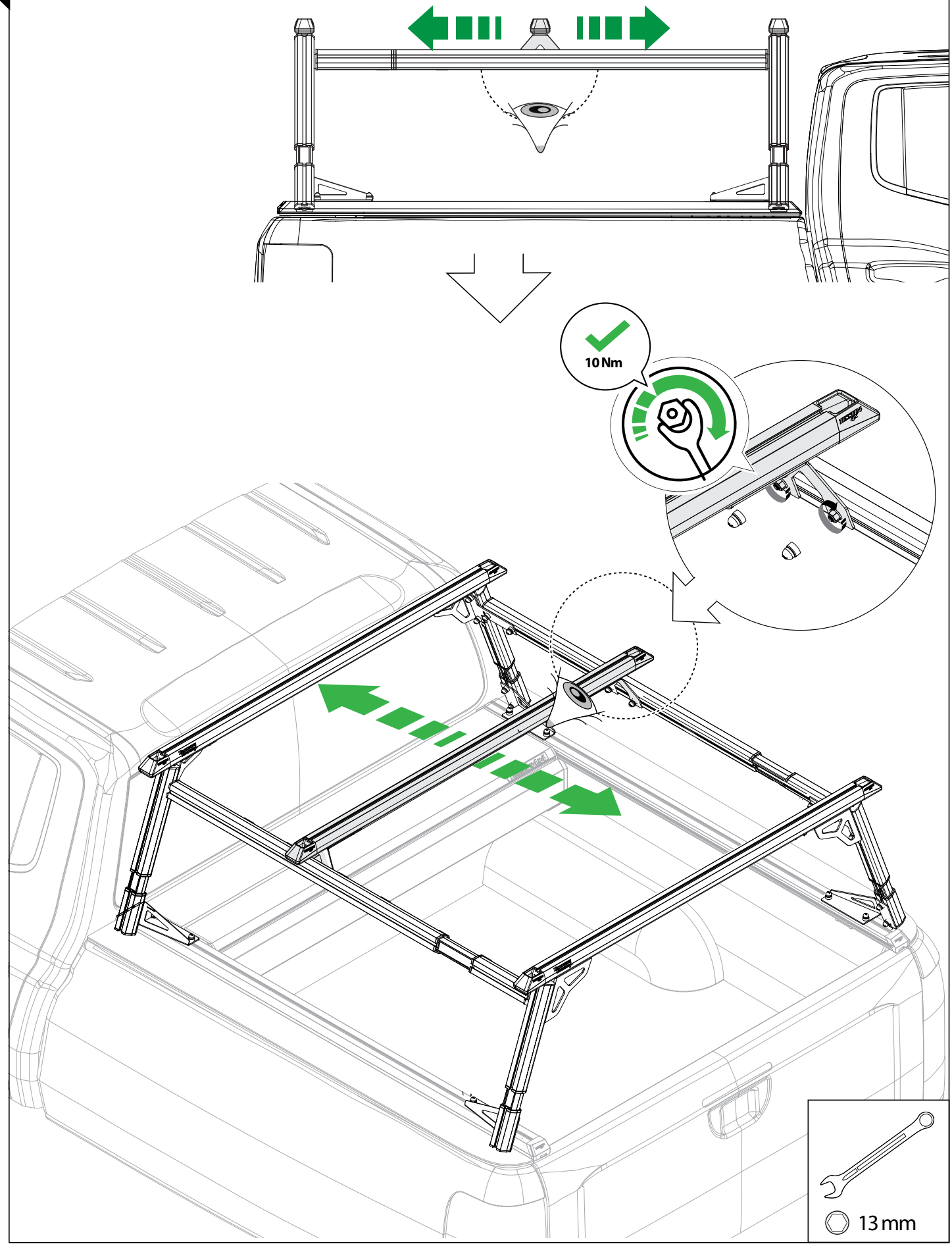

Operation ➡ Side Panels Height Adjustment

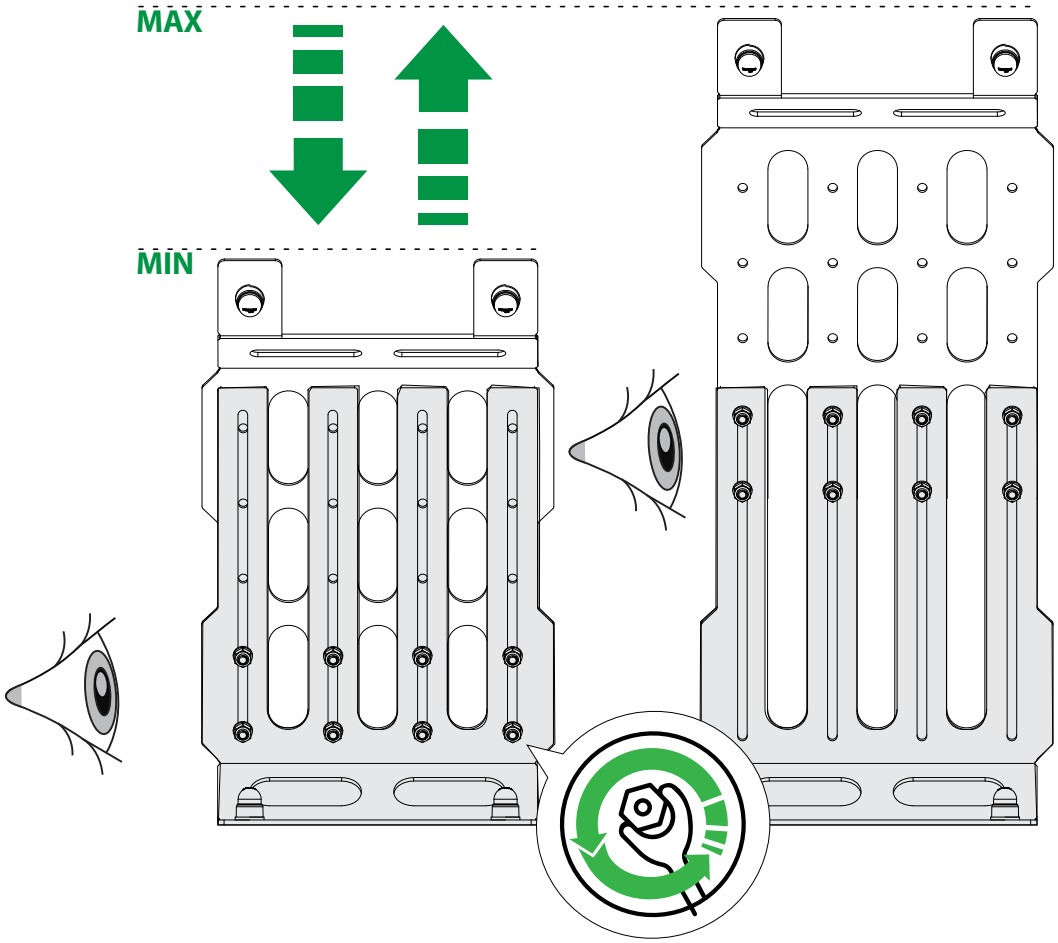

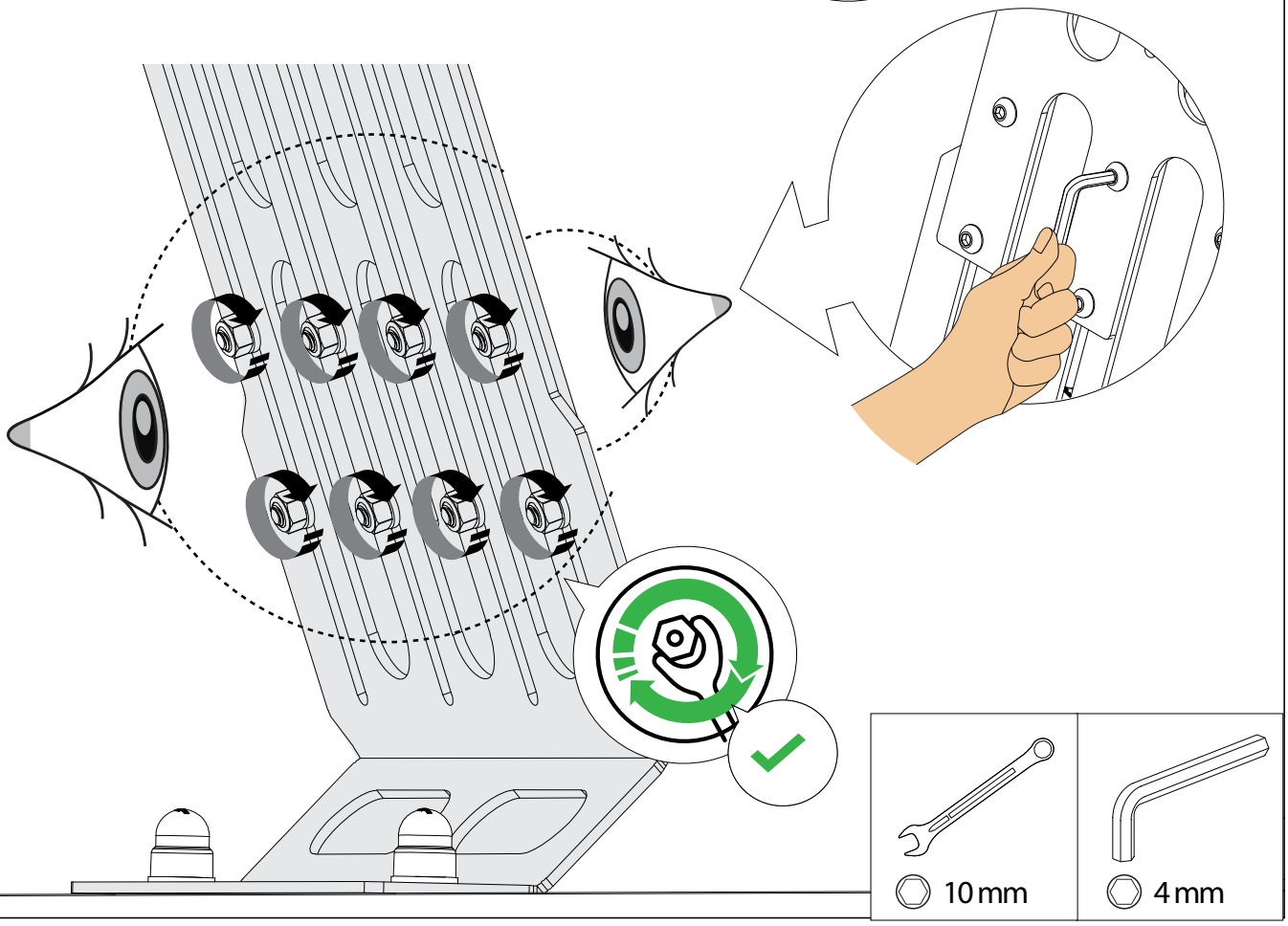

5

Proper Usage ➡ **Tower +**

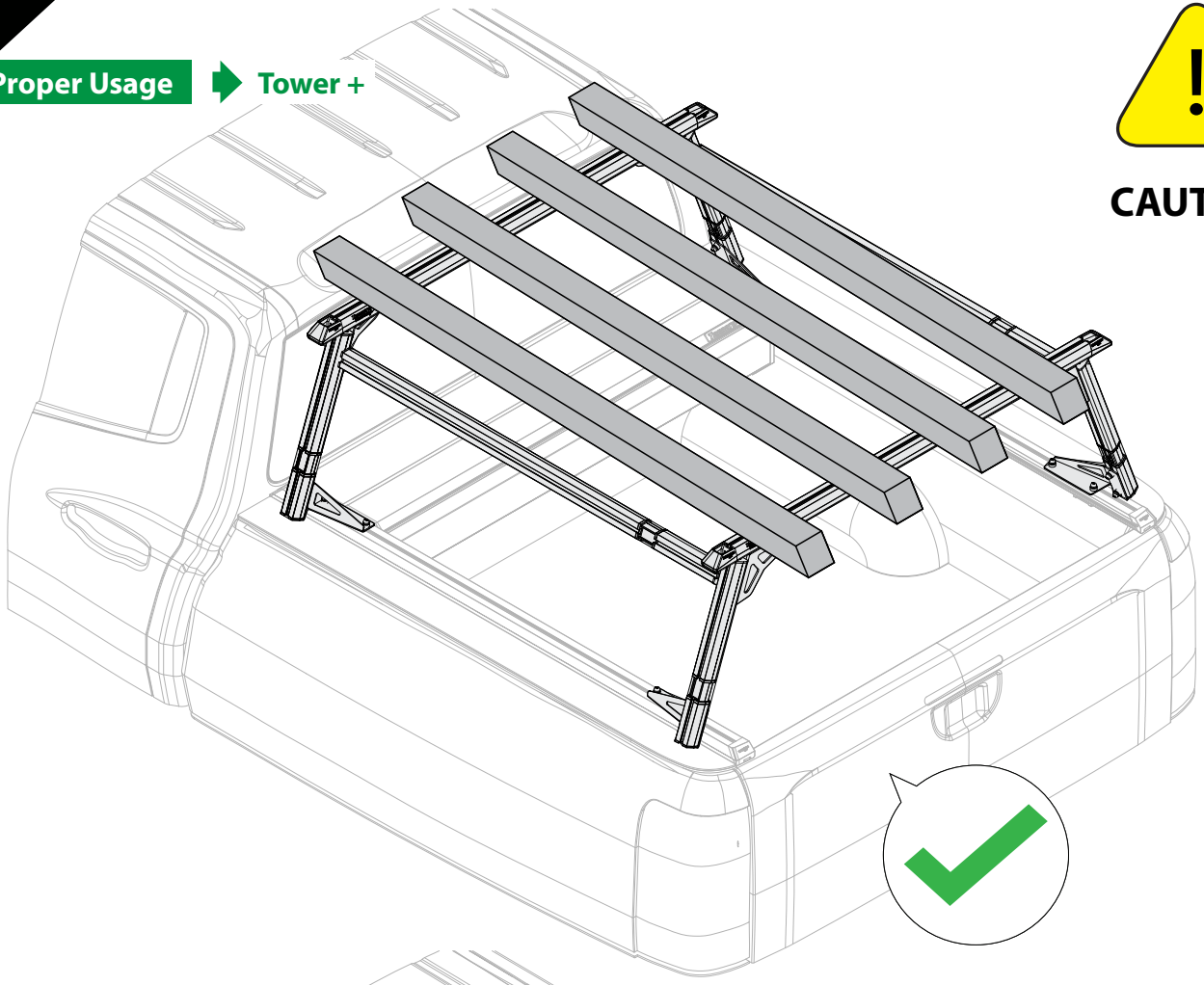

CAUTION

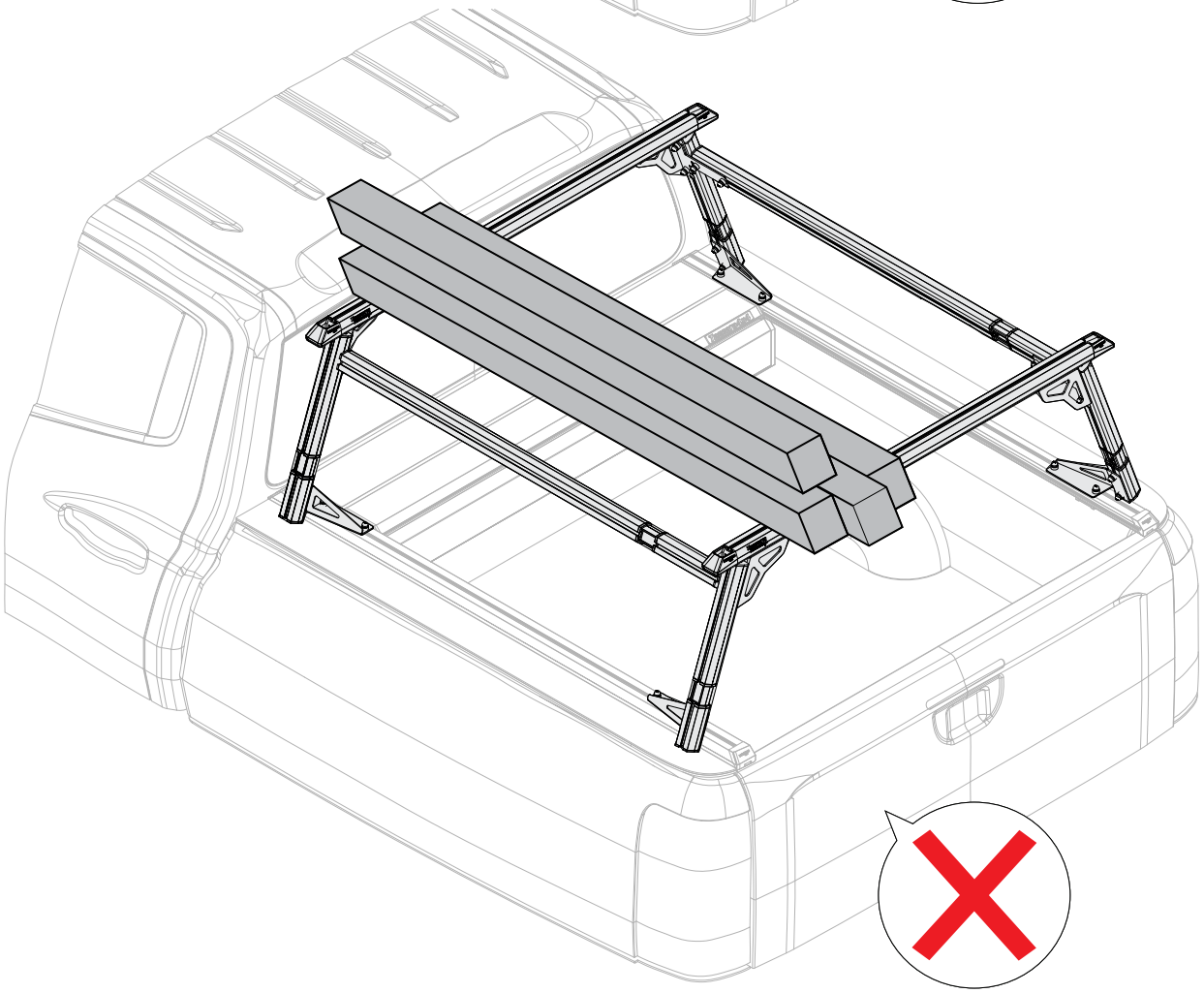

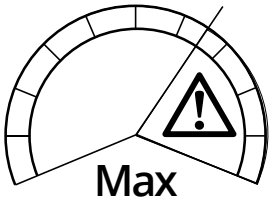

Max
130 km/h / 80 mph

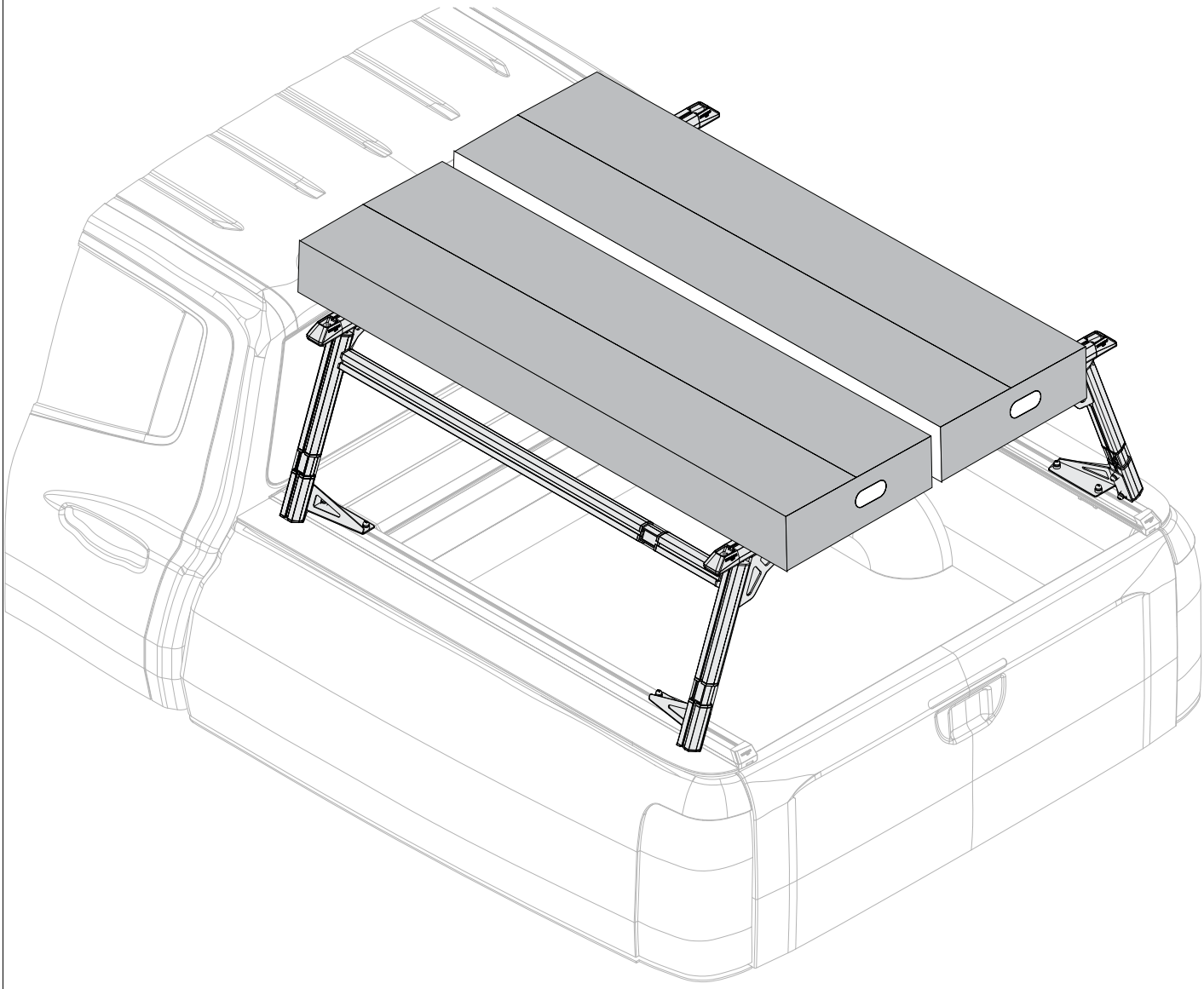

MAX 75 KG / 165 POUNDS

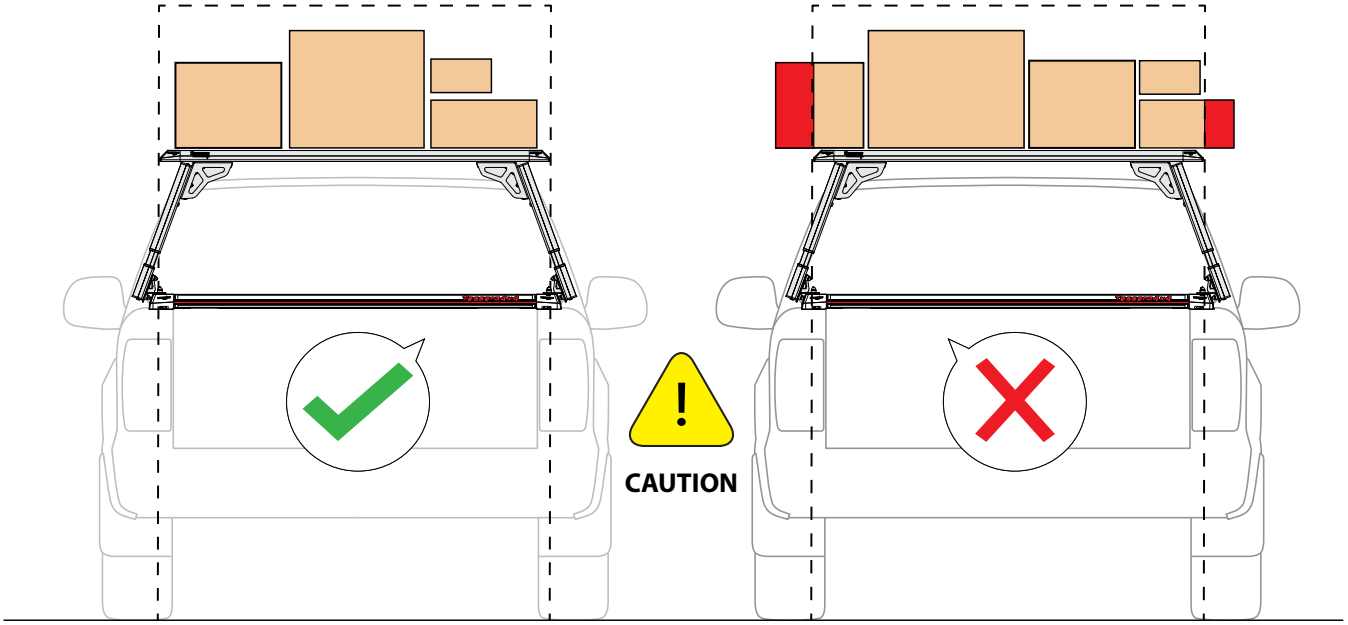
CAUTION

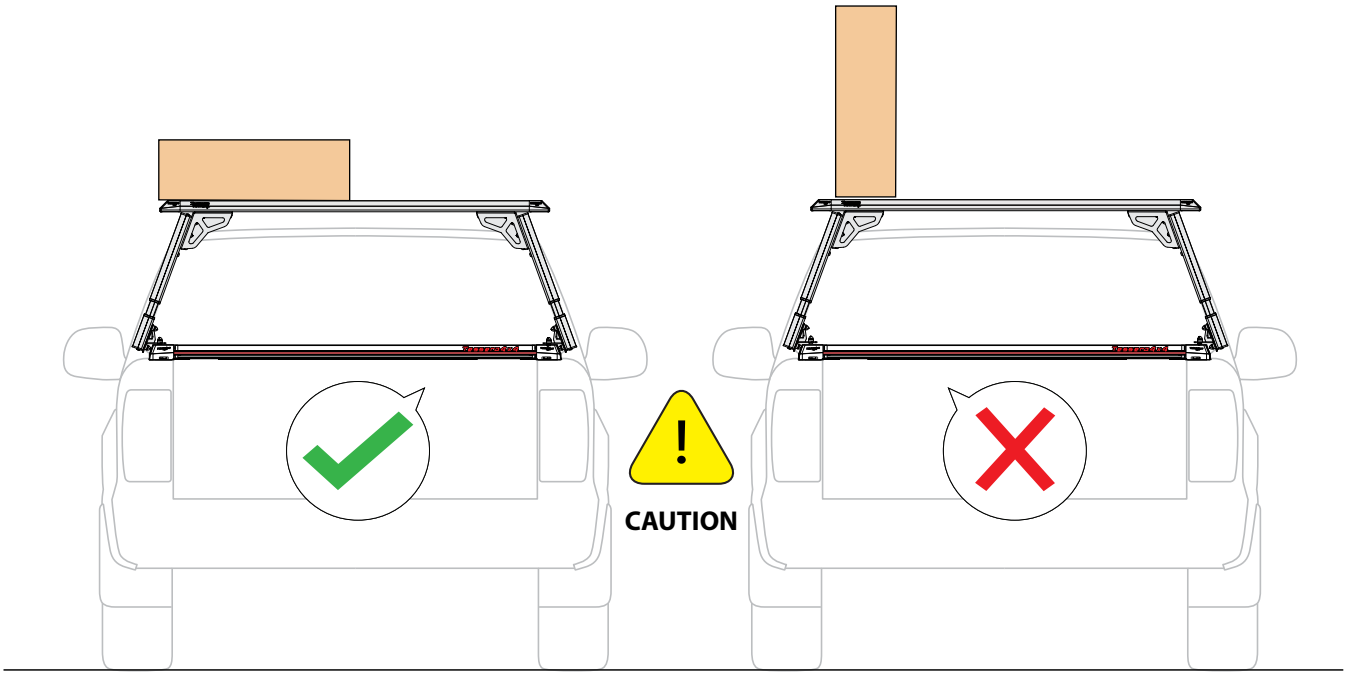
CAUTION

8

Proper Usage → **Tower +**

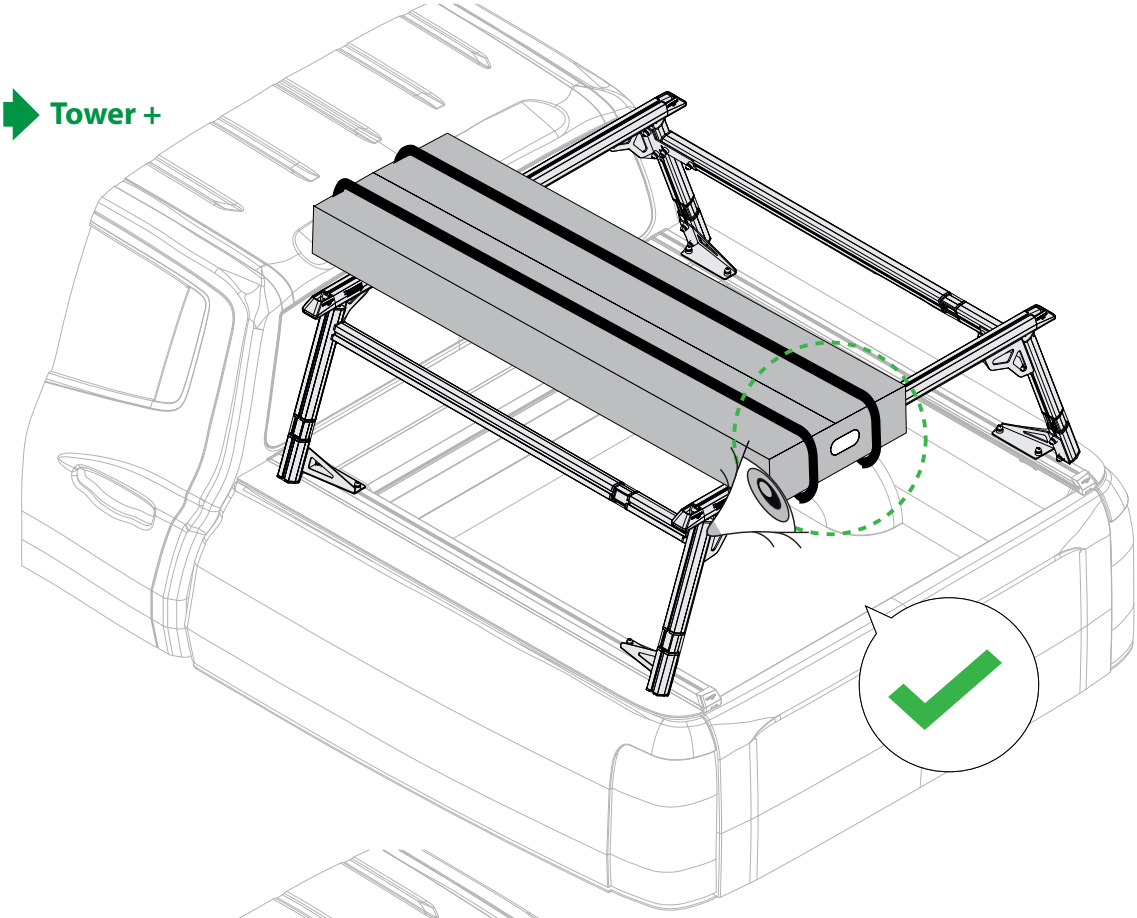

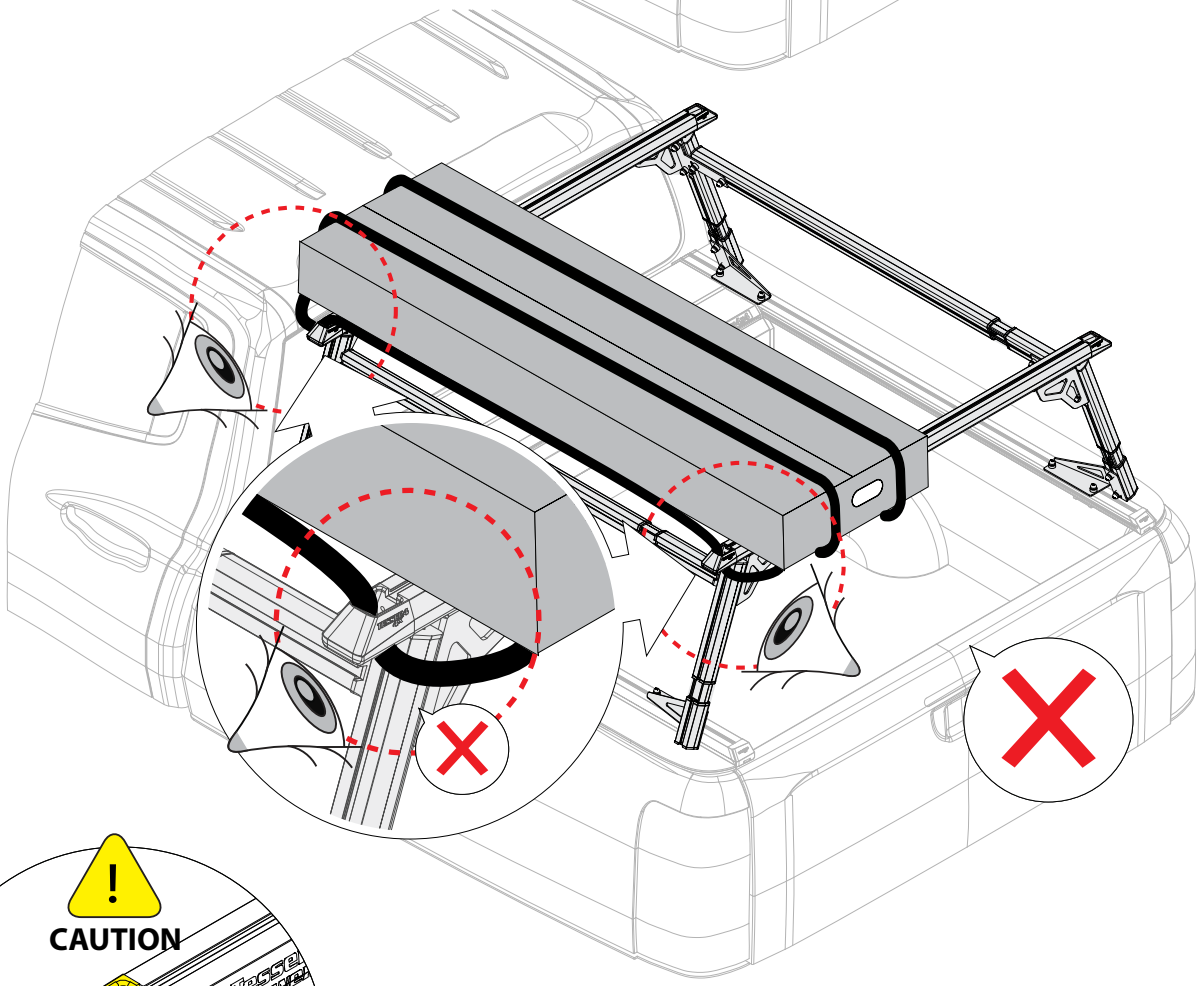

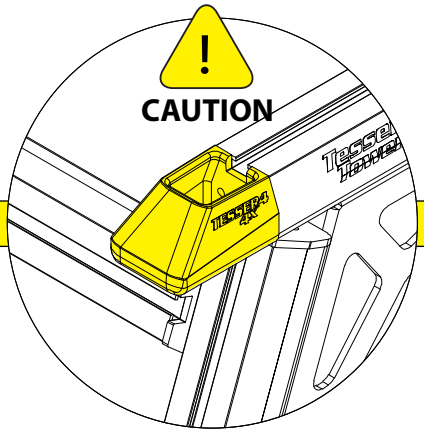

LIGHT WEIGHT

9

Proper Usage → Tower +

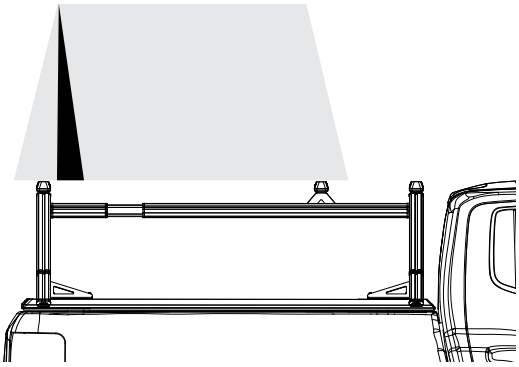

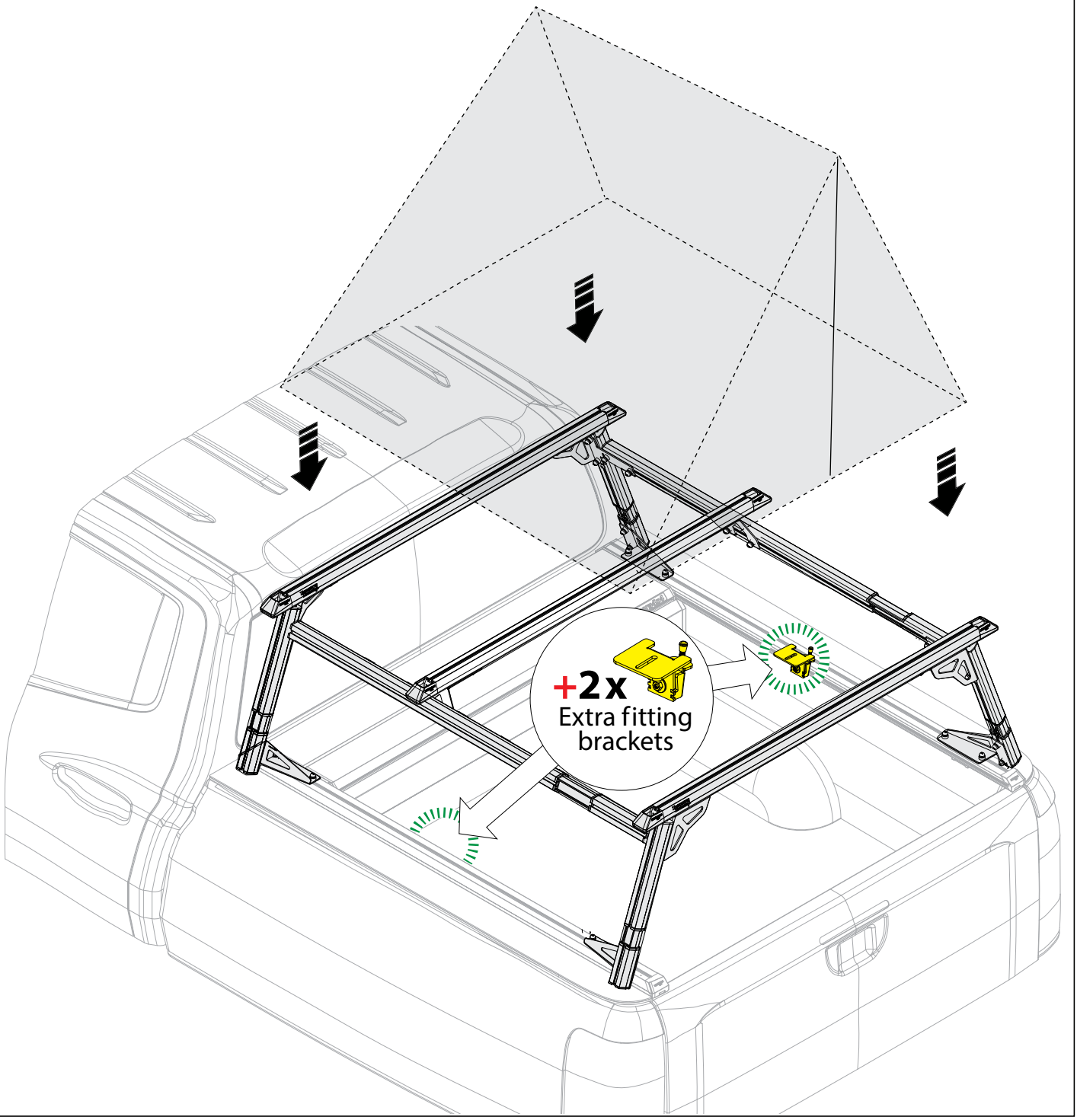

10

Proper Usage ➡ **Tower+ / Side Panels / Extra Bar**

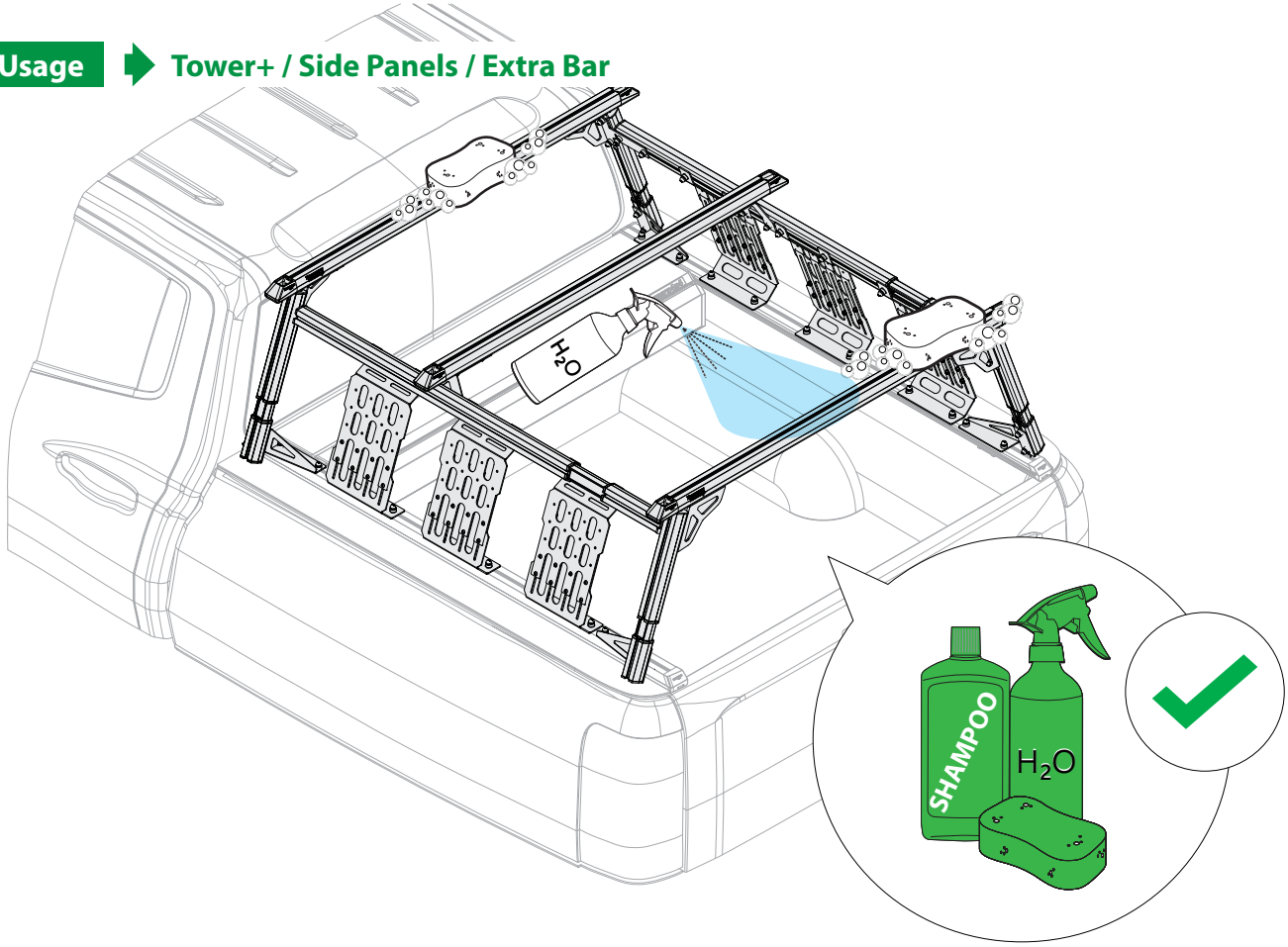

CAUTION **No Acid Liquids**

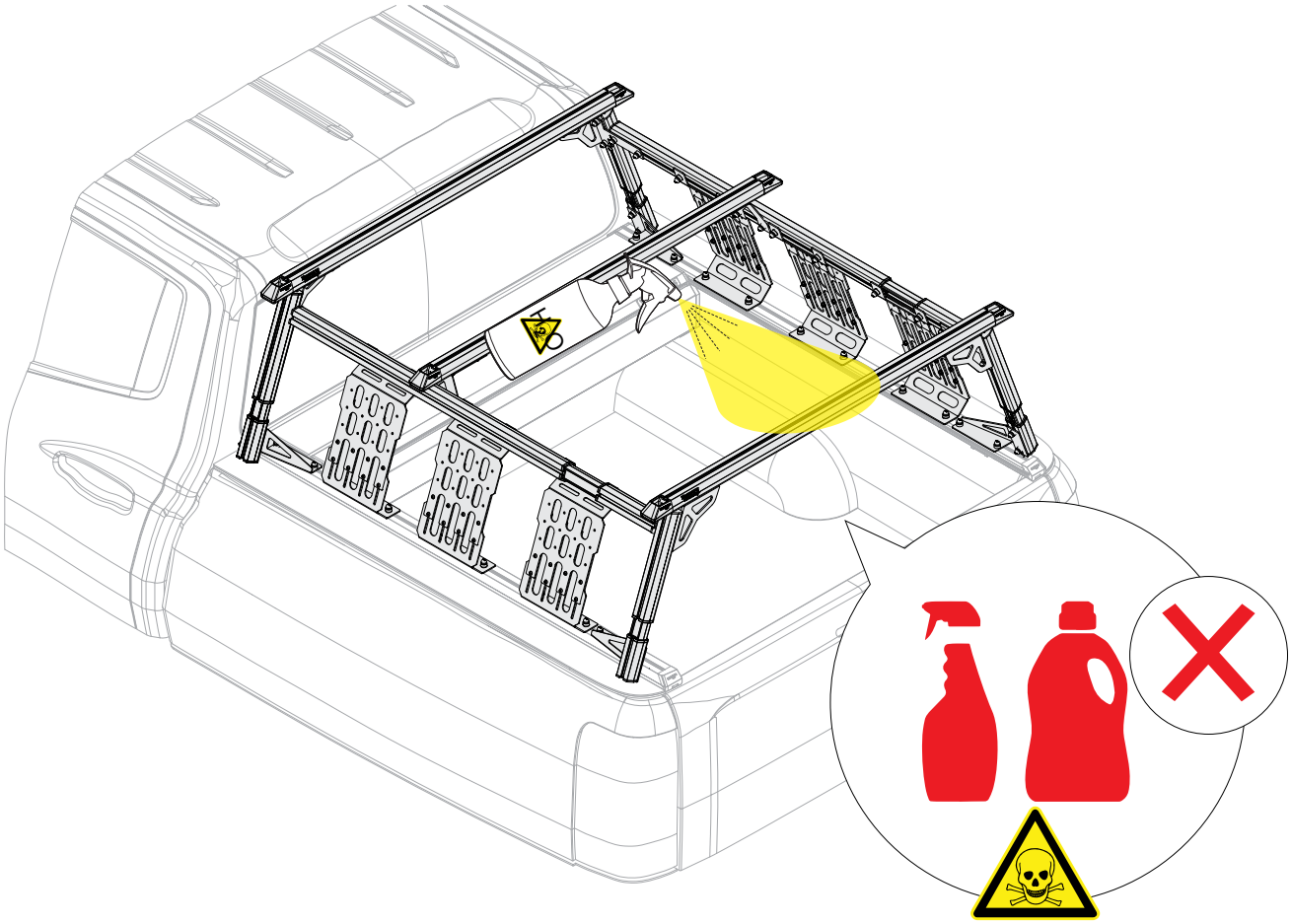

11

Proper Usage

Tower+ / Side Panels / Extra Bar

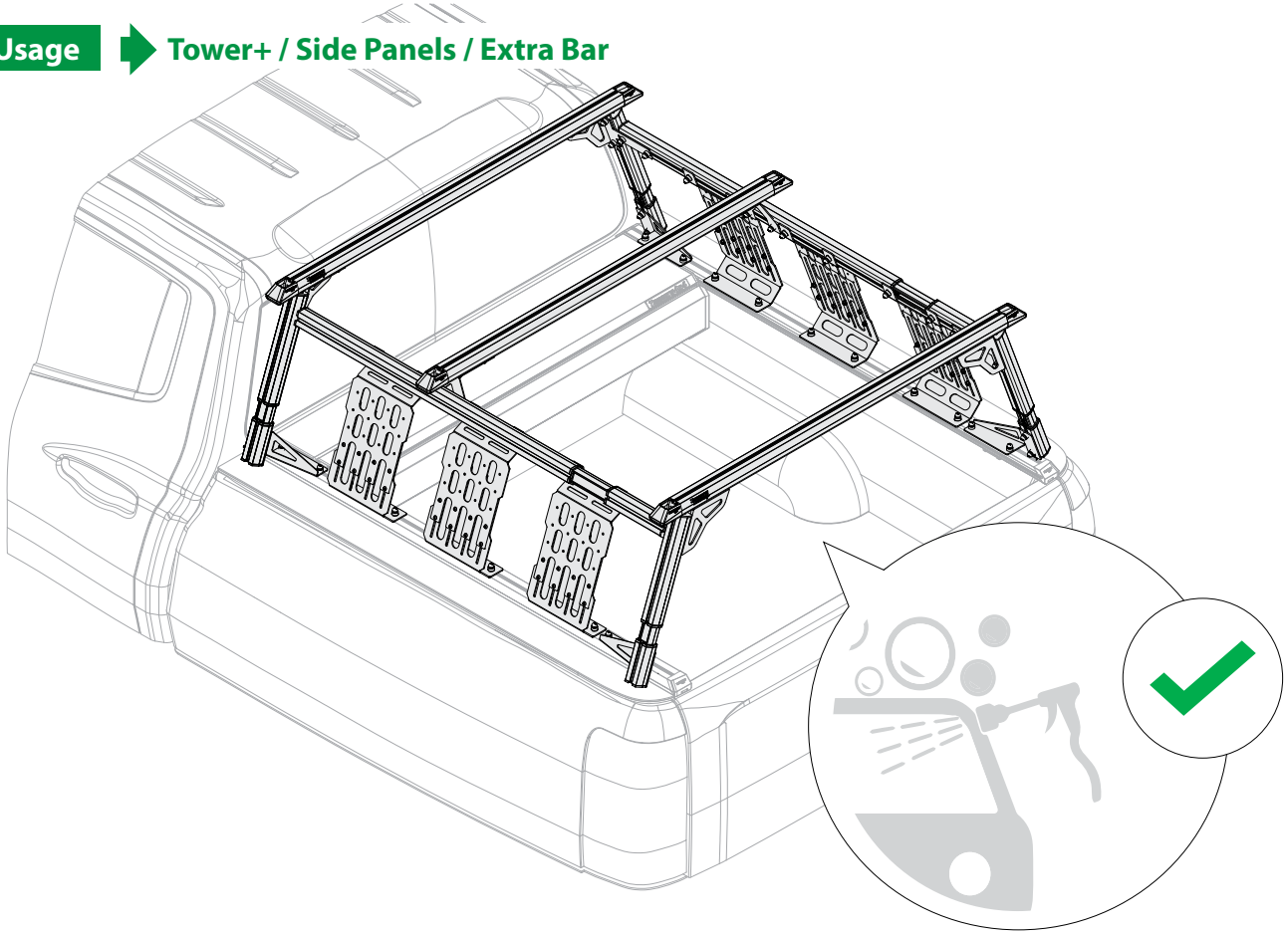

CAUTION **No car wash**

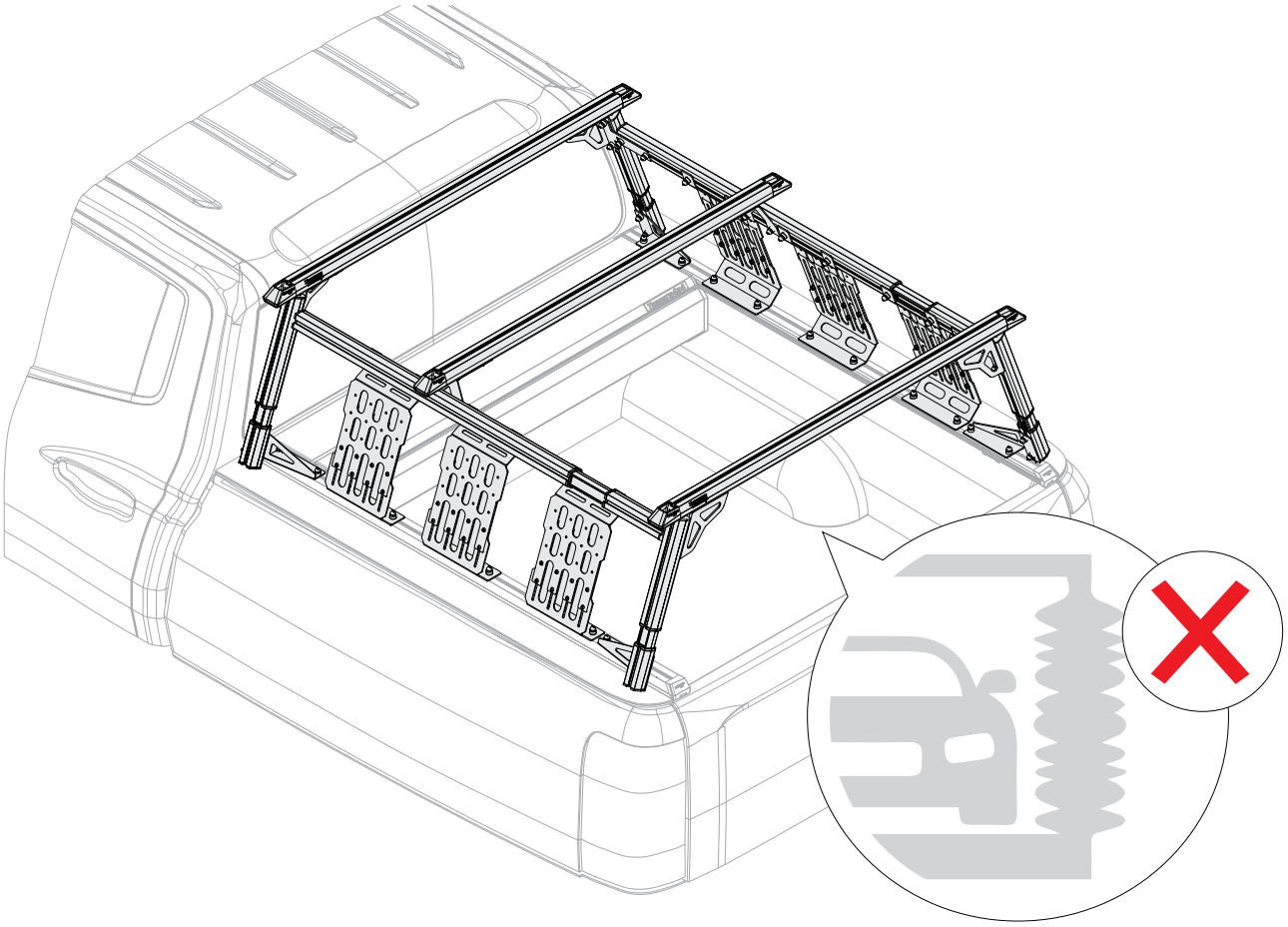

12

Proper Usage → Side Panels

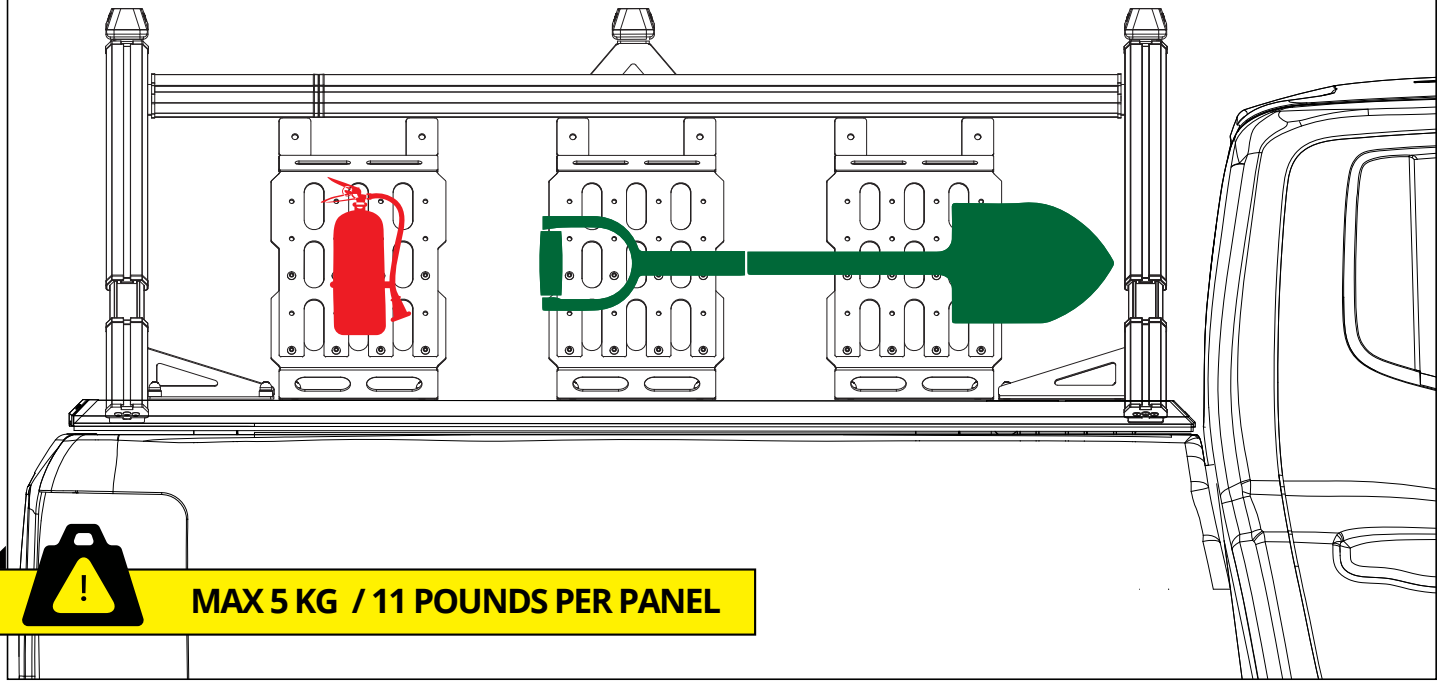

MAX 5 KG / 11 POUNDS PER PANEL

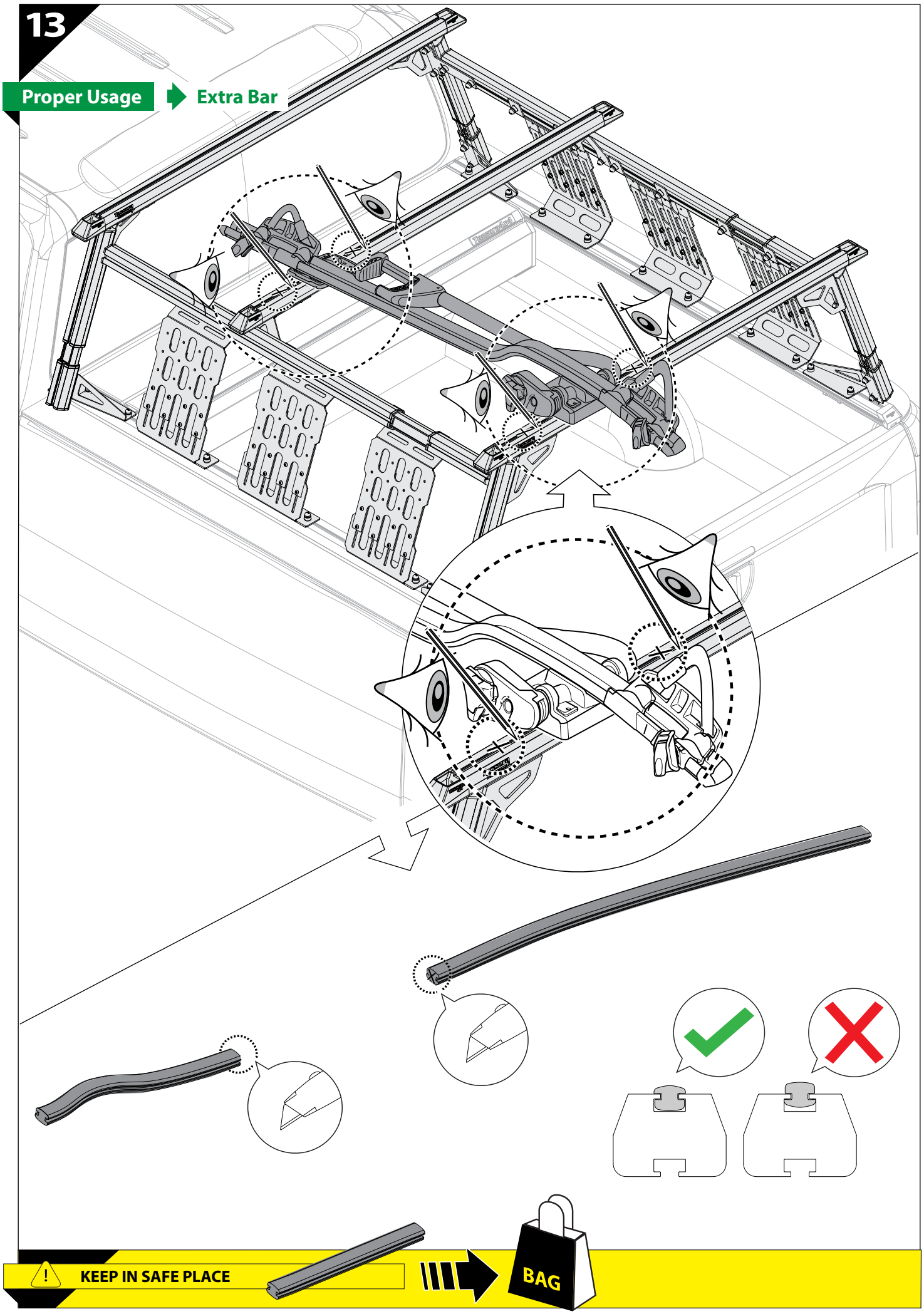
13
Proper Usage
Extra Bar
KEEP IN SAFE PLACE
BAG

+1000 km

+15000 km

Maintenance

Tower +

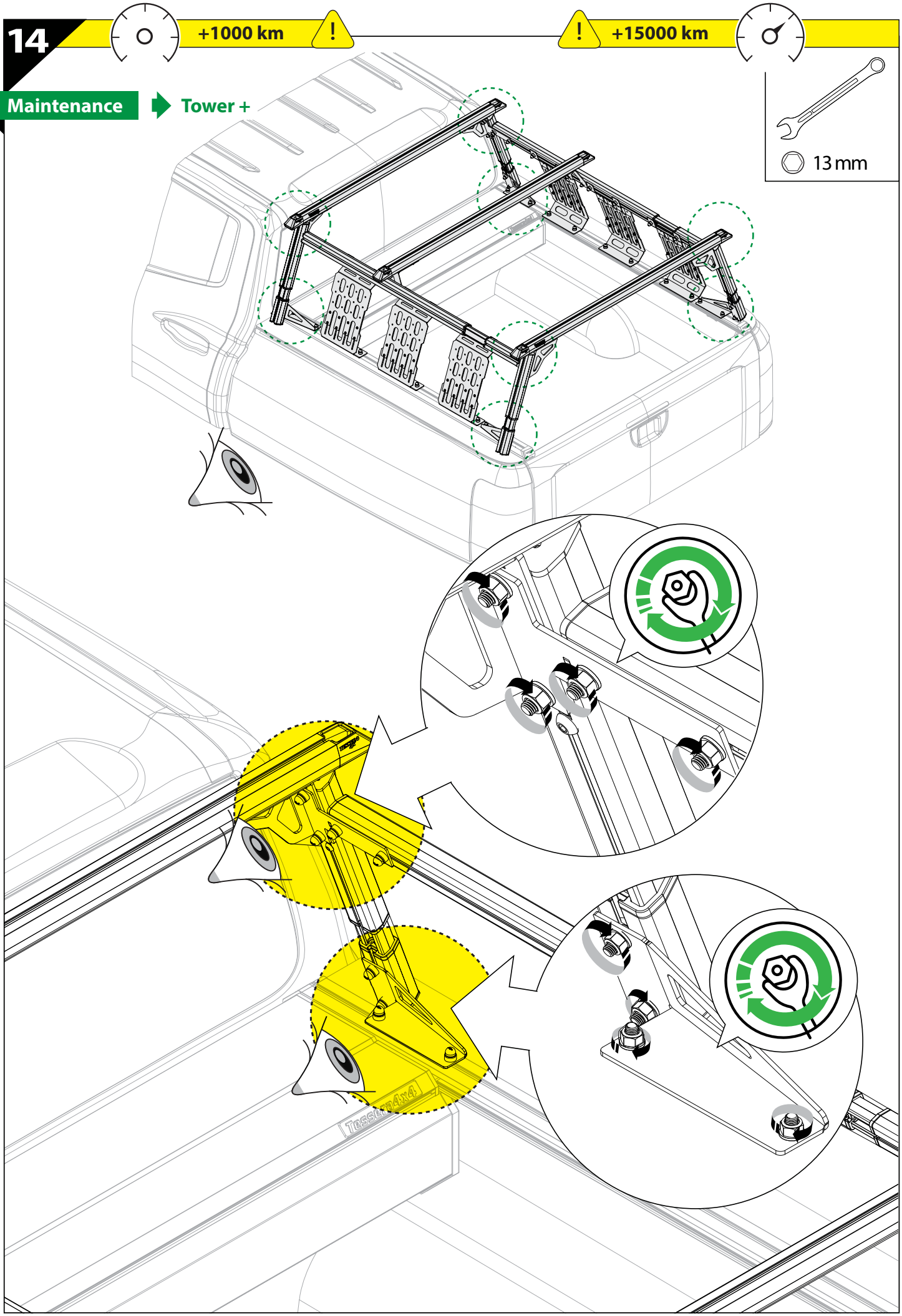

15

+1000 km

+15000 km

Maintenance ➡ **Side Panels**

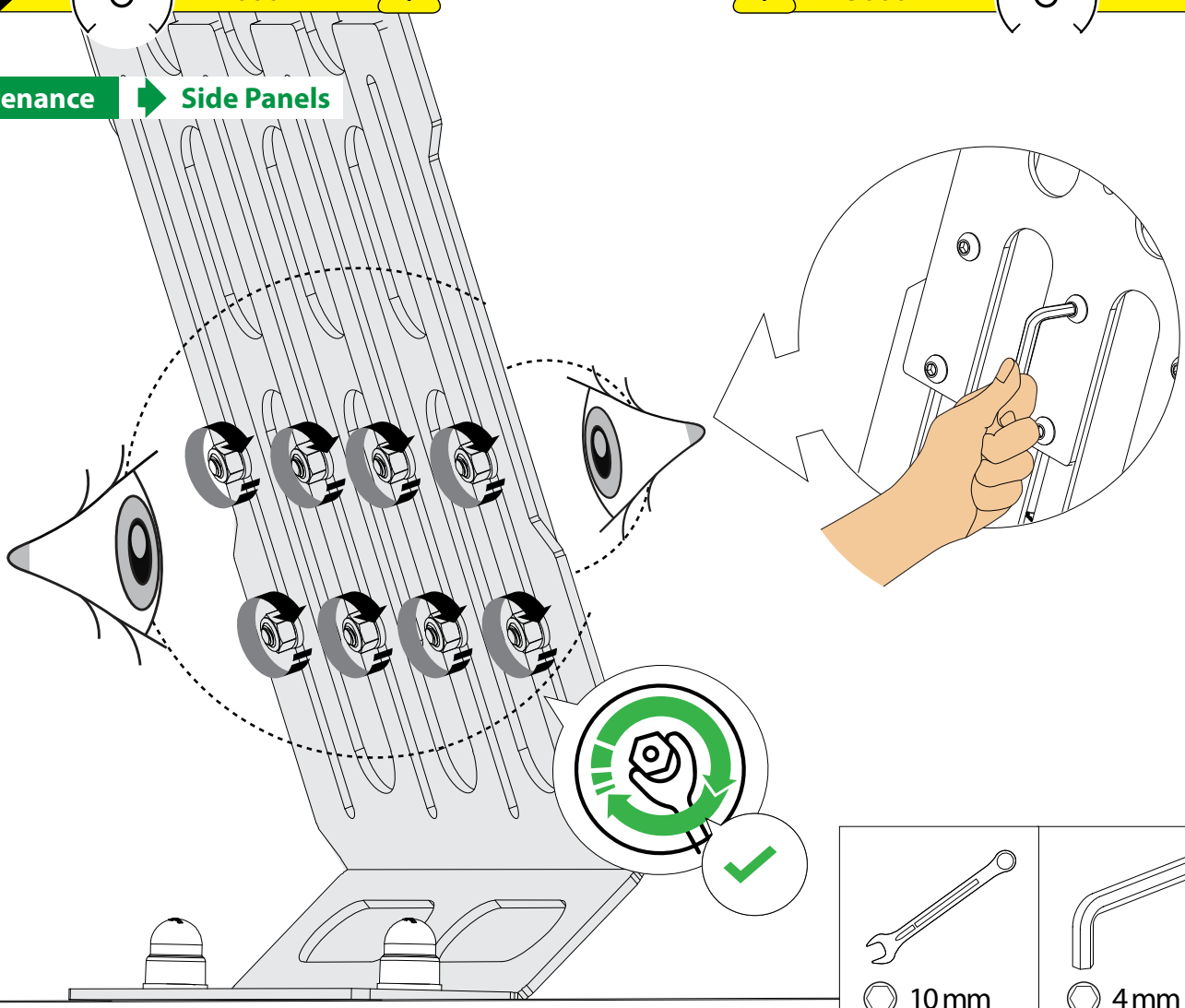

10 mm

4 mm

16

+1000 km

+15000 km

Maintenance ➡ **Extra Bar**

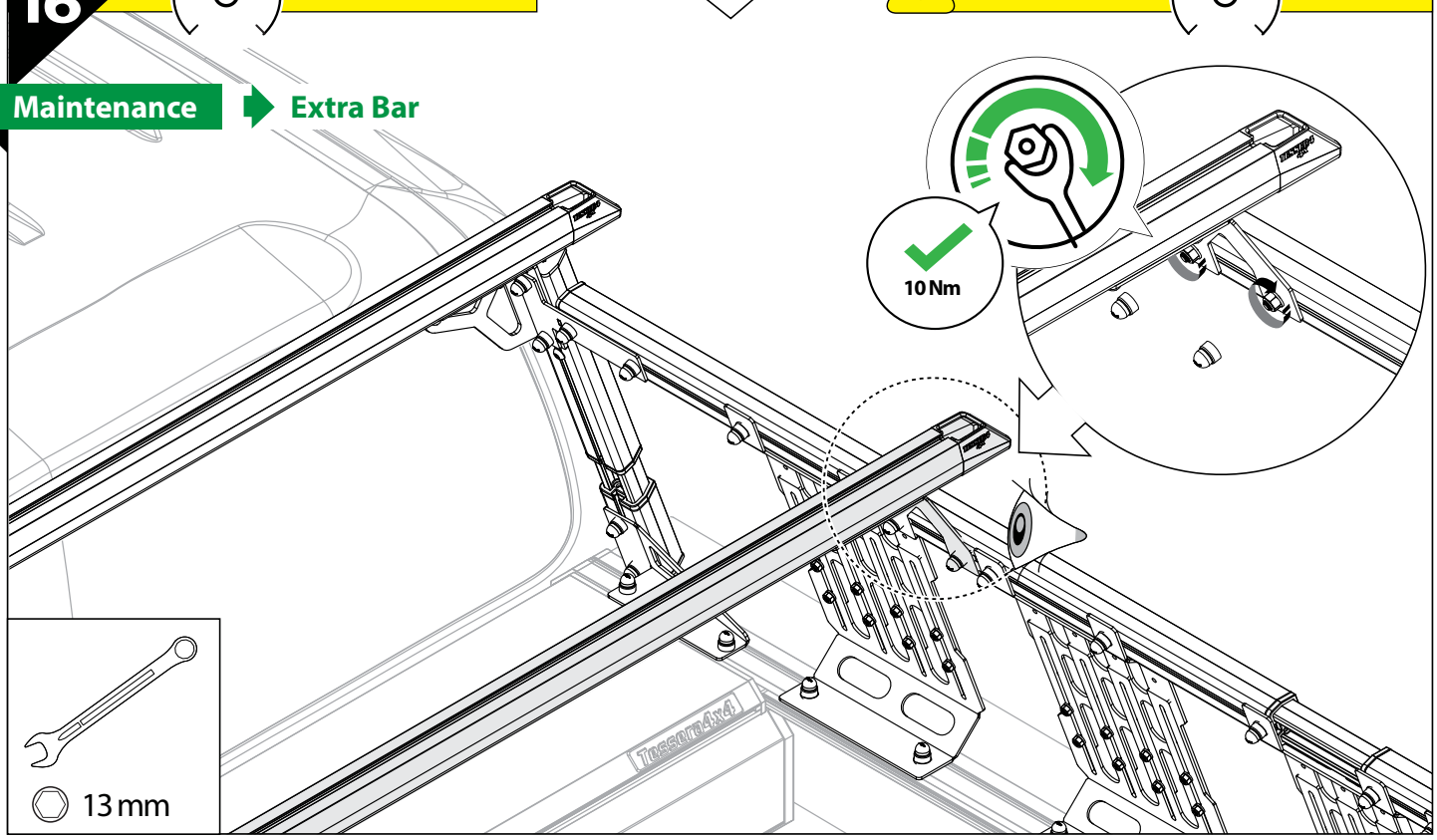

13 mm

Maintenance Manager

Type of Maintenance	Date	Done by

TESSERA 4x4
OFF ROAD ACCESSORIES
Think Quality!

GR:	Εγχειρίδιο χρήσης
GB:	Owners Manual
SF:	Manuaalinen
F:	Manuel d'utilisation
PL:	Instrukcja obsługi
NL:	Handleiding
TR:	Kullanıcı kılavuzu
S:	Bruksanvisning
E:	Manual de usuario
H:	Használati utasítás
P:	Manual de utilização
RUS:	Руково во пользова е я
N:	Brukerveiledning
D:	Gebrauchsanleitung
CZ:	Návod k použití
I:	Manuale d'uso
DEN:	Monteringsvejledning
RO:	Manual de utilizare

Customer Service: +30 (210) 5541161, +30 (210) 5541154 (08:00 - 16:00 EET)

Support department: info@gianso.gr

Website: www.tessera4x4.com

Address: 19.5 km of National road Athens-Korinthos (Elefsina) Greece, P.C: 19200